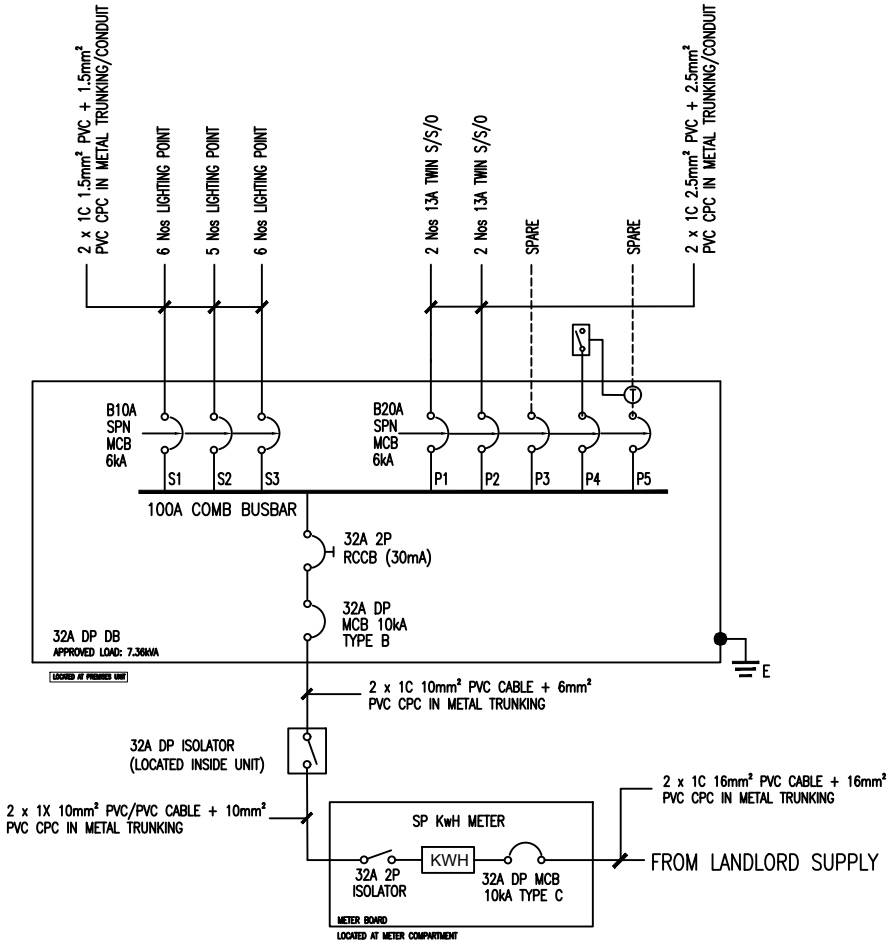

EMA LICENSED ELECTRICAL WORKER
ELECTRICAL
SEOW SWEE LEONG
8/25825
SINGAPORE

CLIENT / ADDRESS :	MAIN CONTRACTOR :	ELECTRICAL CONTRACTOR :	DRAWING TITLE :	LEW :	CHECKED :	DATE :
THOMSON PLAZA #01-83	REGIIS DESIGN & CONSULTANCY PTE LTD		SINGLE LINE DIAGRAM (SLD)	Seow Swee Leong EMA Licence No. : 8/25825		19 MAY 2025
					DRAWING NO. : I2R-REG-TSP-SLD	REV : 0